Rococo

Two Columns

Since 1895 to nowadays

Rococo radiators were first casted in 1895 by the American Radiator Company. Later, they opened foundries in France and produced this particular model for the European market. Unlike any radiator model, Rococo was produced for many years and still remains the most sought after type of radiator.

The major advantage of the two column Rococo is its slimline design ideal for smaller rooms. Made from cast iron its heating output is far superior to aluminium radiators and it also retains heat for much longer.

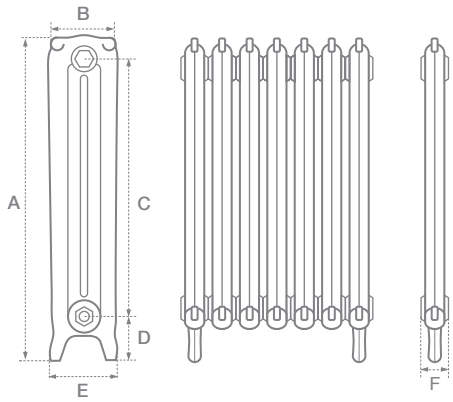

Section Height (A)	Section Width (B)	Section Height (C)	Section Height (D)	Section Width (E)	Section Depth (F)	Heat output Delta 50		Heat output Delta 60		Section Weight (Kg)
						Watts	BTU's	Watts	BTU's	
510 mm	185 mm	350 mm	110 mm	200 mm	76 mm	110	376	140	478	7.90
660 mm	185 mm	500 mm	110 mm	200 mm	76 mm	130	444	163	556	11
760 mm	185 mm	600 mm	110 mm	200 mm	76 mm	143	489	180	614	12.30
955 mm	185 mm	800 mm	110 mm	200 mm	76 mm	168	573	211	720	14.50